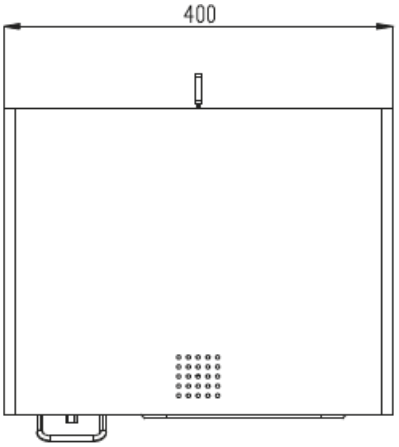
400

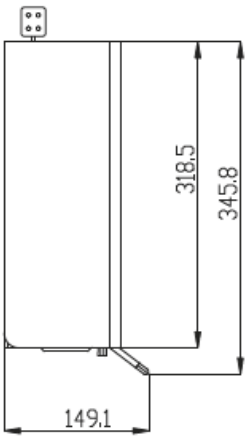
318.5
345.8
149.1

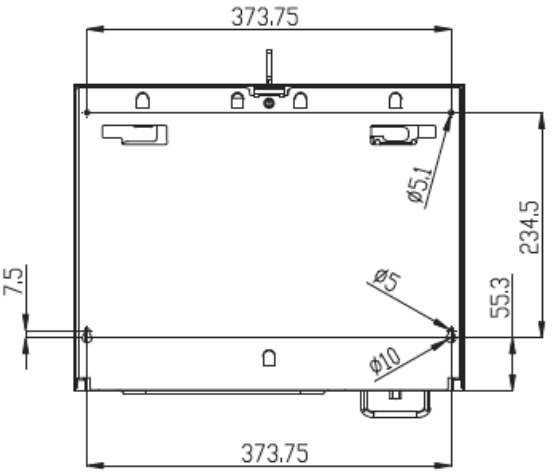
373.75
ø5.1
234.5
7.5
ø5
55.3
ø10
373.75

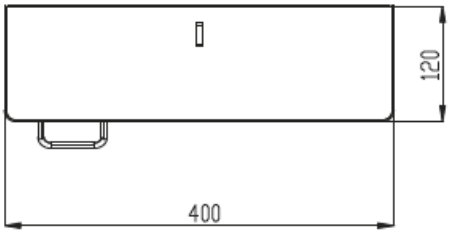
120
400